Computer Network Course Practice

Lab-4 Static and Default Routing

CONTENTS

Objectives 2
Required Resources 2
Background 2
Routing 2
Static Routing 2
Dynamic Routing 2
Default Route 2
Lab-4-1: Static and Default Route Configuration 3
Requirements 3
Steps 3
Comments 8

OBJECTIVES

1. Understand static and dynamic routing.
2. Configure and verify static and default routes.

REQUIRED RESOURCES

1. Huawei eNSP.
2. ping.
3. tracert.
4. Wireshark.

BACKGROUND

Routing

Routing is the process of selecting best paths in a network. Routing is one of the most essential procedures in data communication. It ensures that data travels from one network to another with optimal speed and minimal delay, and that its integrity is maintained in the process. Routing is a key feature of the Internet because it enables messages to pass from one computer to another and eventually reach the target machine.

Broadly, routing is performed in two different ways: static routing and dynamic routing. Static routing and dynamic routing are not mutually exclusive. Both static routing and dynamic routing are usually used on a router to maximize routing efficiency and to provide backups in the event that dynamic routing information fails to be exchanged.

Static Routing

Static routing is a type of network routing technique. Static routing is not a routing protocol; instead, it is the manual configuration and selection of a network route, usually managed by the network administrator. Unlike dynamic routing, static routes are fixed and do not change if the network is changed or reconfigured.

Static routes are normally implemented in those situations where the choices in route selection are limited, or there is only a single default route available. Also, static routing can be used if you have only few devices for route configuration and there is no need for route change in the future.

Dynamic Routing

Dynamic routing is a networking technique that provides optimal data routing. Unlike static routing, dynamic routing enables routers to select paths according to real-time logical network layout changes. In dynamic routing, the routing protocol operating on the router is responsible for the creation, maintenance and updating of the dynamic routing table. In static routing, all these jobs are manually done by the system administrator. Dynamic routing uses multiple algorithms and protocols. The most popular are Routing Information Protocol (RIP) and Open Shortest Path First (OSPF).

Default Route

A default route is a type of static route that specifies a gateway to use when the routing table does not contain a path for the destination network. A default route of a computer is the packet forwarding rule (route) taking effect when no other route can be determined for a given Internet Protocol (IP) destination address. All packets for destinations not established in the routing table are sent via the default route. The default route in IPv4 is designated as the zero-address 0.0.0.0/0 in CIDR notation.

Static and Default routing are the simplest forms of network routing and configured manually. A well designed network should have very few static routes as the general rule of thumb; when you configure a static route and the network changes, you'll then potentially need to reassess and reconfigure the static route to ensure network reachability.

LAB-4-1: STATIC AND DEFAULT ROUTE CONFIGURATION

Requirements

The network topology is shown in Figure 4-1. Four routers are used to interconnect the networks of different departments on the campus. Please configure static or default routes on the four routers to implement communication between departments A, B and loopback 0 (where loopback 0 simulates a host on the network of other departments).

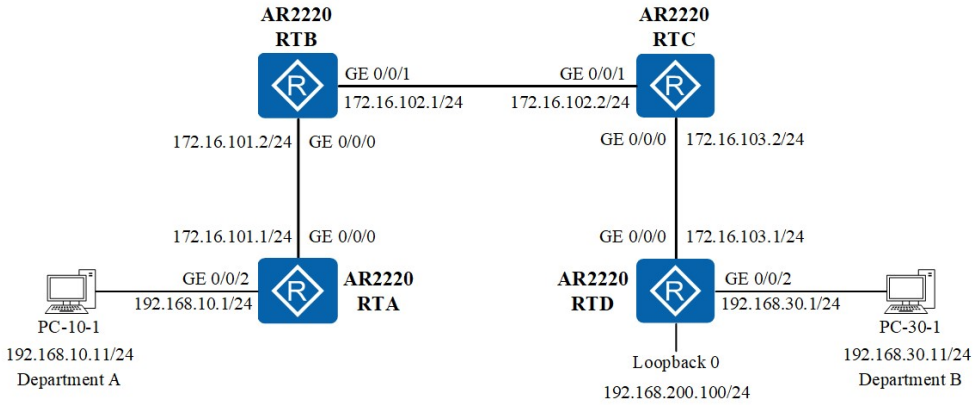

Figure 4-1 A network with static and default routes configured on the routers

The IPv4 address allocations are shown in Table 4-1.

Table 4-1 IPv4 Addressing Table

	IPv4 Address	Mask	Default Gateway
PC			
PC-10-1	192.168.10.11	255.255.255.0	192.168.10.1
PC-30-1	192.168.30.11	255.255.255.0	192.168.30.1
Router RTA			
GE 0/0/2	192.168.10.1	255.255.255.0	
GE 0/0/0	172.16.101.1	255.255.255.0	
Router RTB			
GE 0/0/0	172.16.101.2	255.255.255.0	
GE 0/0/1	172.16.102.1	255.255.255.0	
Router RTC			
GE 0/0/1	172.16.102.2	255.255.255.0	
GE 0/0/0	172.16.103.2	255.255.255.0	
Router RTD			
GE 0/0/0	172.16.103.1	255.255.255.0	
GE 0/0/2	192.168.30.1	255.255.255.0	
Loopback 0	192.168.200.100	255.255.255.0	

Steps

Step 1: Create the topology, cable a network.

1. Start eNSP and click the "New Topology" icon in the toolbar.
2. Add four AR2220 routers and two PCs to the blank work area.
3. Cable as necessary.
4. Name these routers and PCs.

Step 2: Assign the IPv4 address and subnet mask for each PC.

1. Double-click each PC, select the "Basic Config" tab in the pop-up window, and configure the IPv4 address and subnet mask for it.
2. After configuration, click the "Save" icon in the toolbar to save the topology to the specified directory, and name the topology file **lab-4-1 RT.StaticDefaultRoute.topo**.

Step 3: Start devices.

Click the " Start Device" icon in the toolbar to start all devices.

Step 4: Assign IP addresses to interfaces on the routers.

1. On RTA

Double-click the icon of router RTA in the work area to open its configuration window.

```
<huawei> system-view
[huawei] sysname RTA
[RTA] interface gigabitethernet 0/0/2
[RTA-GigabitEthernet0/0/2] ip address 192.168.10.1 24
[RTA-GigabitEthernet0/0/2] quit
[RTA] interface gigabitethernet 0/0/0
[RTA-GigabitEthernet0/0/0] ip address 172.16.101.1 24
[RTA-GigabitEthernet0/0/0] quit
# display IP information of all interfaces.
[RTA] display ip interface brief
# display IP routing table.
[RTA] display IP routing-table
```

2. On RTB

```
<huawei> system-view
[huawei] sysname RTB
[RTB] interface gigabitethernet 0/0/0
[RTB-GigabitEthernet0/0/0] ip address 172.16.101.2 24
[RTB-GigabitEthernet0/0/0] quit
[RTB] interface gigabitethernet 0/0/1
[RTB-GigabitEthernet0/0/1] ip address 172.16.102.1 24
[RTB-GigabitEthernet0/0/1] quit
[RTB] display ip interface brief
[RTB] display IP routing-table
```

3. On RTC

```
<huawei> system-view
[huawei] sysname RTC
[RTC] interface gigabitethernet 0/0/0
[RTC-GigabitEthernet0/0/0] ip address 172.16.103.2 24
[RTC-GigabitEthernet0/0/0] quit
[RTC] interface gigabitethernet 0/0/1
[RTC-GigabitEthernet0/0/1] ip address 172.16.102.2 24
[RTC-GigabitEthernet0/0/1] quit
[RTC] display ip interface brief
[RTC] display IP routing-table
```

4. On RTD

```
<huawei> system-view
[huawei] sysname RTD
[RTD] interface gigabitethernet 0/0/2
[RTD-GigabitEthernet0/0/2] ip address 192.168.30.1 24
[RTD-GigabitEthernet0/0/2] quit
[RTD] interface gigabitethernet 0/0/0
[RTD-GigabitEthernet0/0/0] ip address 172.16.103.1 24
[RTD-GigabitEthernet0/0/0] quit
# configure loopback 0.
# A loopback interface is a logical, virtual interface in a router and is always up.
[RTD] interface loopback 0
[RTD-loopback0] ip address 192.168.200.100 24
[RTD-loopback0] quit
[RTD] display ip interface brief
[RTD] display IP routing-table
```

Step 5: Verify the basic configurations.

Test connectivity between devices.

Ping PC-30-1 from PC-10-1 command window and visa versa.

Ping PC-30-1 from loopback 0 on router RTD configuration window and visa versa.

Ping PC-10-1 from loopback 0 on router RTD configuration window and visa versa.

Answer the following questions:

Q4-1.1. Paste the screenshot of the created topology.

Q4-1.2. Paste the screenshot of the IP routing table on the router RTA.

Q4-1.3. Paste the screenshot of the IP routing table on the router RTB.

Q4-1.4. Paste the screenshot of the IP routing table on the router RTC.

Q4-1.5. Paste the screenshot of the IP routing table on the router RTD.

Q4-1.6. Can PC-10-1 and PC-30-1 ping each other? Please paste the screenshot of the ping result.

Q4-1.7. Can PC-30-1 and loopback 0 on RTD ping each other? Please paste the screenshot of the ping result.

Q4-1.8. Can PC-10-1 and loopback 0 on RTD ping each other? Please paste the screenshot of the ping result.

Step 6: Configure static routes on the routers.

1. On RTA

Double-click the icon of router RTA in the work area to open its configuration window.

```
<RTA> system-view
# configure route to the 192.168.30.0/24 network using the IP address of the interface GE 0/0/0 on its neighbor RTB as the next-hop address.
[RTA]  ip route-static 192.168.30.0 24 172.16.101.2
# display IP routing table.
[RTA] display IP routing-table
```

2. On RTB

```
<RTB> system-view
# configure route to the 192.168.30.0/24 network using the IP address of the interface GE 0/0/1 on its neighbor RTC as the next-hop address.
[RTB] ip route-static 192.168.30.0 24 172.16.102.2
# configure route to the 192.168.10.0/24 network using the IP address of the interface GE 0/0/0 on its neighbor RTA as the next-hop address.
[RTB] ip route-static 192.168.10.0 24 172.16.101.1
[RTB] display IP routing-table
```

3. On RTC

```
<RTC> system-view
# configure route to the 192.168.30.0/24 network using the IP address of the interface GE 0/0/0 on its neighbor RTD as the next-hop address.
[RTC] ip route-static 192.168.30.0 24 172.16.103.1
# configure route to the 192.168.10.0/24 network using the IP address of the interface GE 0/0/1 on its neighbor RTB as the next-hop address.
[RTC] ip route-static 192.168.10.0 24 172.16.102.1
[RTC] display IP routing-table
```

4. On RTD

```
<RTD> system-view
# configure route to the 192.168.10.0/24 network using the IP address of the interface GE 0/0/0 on its neighbor RTC as the next-hop address.
[RTB] ip route-static 192.168.10.0 24 172.16.103.2
[RTB] display IP routing-table
```

Step 7: Verify the static route configurations.

1. Test connectivity by pinging from each PC to the default gateway that has been configured for that host.
2. Test connectivity between devices.
   Ping PC-30-1 from PC-10-1 command window and visa versa.
   Ping PC-30-1 from loopback 0 on router RTD configuration window and visa versa.

Ping PC-10-1 from loopback 0 on router RTD configuration window and visa versa.

3. Trace the route from PC-10-1 to PC-30-1. Issue the following command in PC-10-1's command window:

```
tracert 192.168.30.11
```

Answer the following questions:

Q4-1.9. Paste the screenshot of the IP routing table on the router RTA.

Q4-1.10. Paste the screenshot of the IP routing table on the router RTB.

Q4-1.11. Paste the screenshot of the IP routing table on the router RTC.

Q4-1.12. Paste the screenshot of the IP routing table on the router RTD.

Q4-1.13. Can PC-10-1 and PC-30-1 ping each other? Please paste the screenshot of the ping result.

Q4-1.14. Can PC-10-1 and loopback 0 on RTD ping each other? Please paste the screenshot of the ping result. If they cannot ping each other, please explain why.

Q4-1.15. Please paste the screenshot of the result of command "tracert 192.168.30.11" issued from PC-10-1.

Step 8: Configure default routes on the routers.

1. On RTA

Double-click the icon of router RTA in the work area to open its configuration window.

```
<RTA> system-view
# configure a static default route using the IP address of the interface GE 0/0/0 on its neighbor RTB as the next-hop address.
[RTA]  ip route-static 0.0.0.0 0.0.0.0 172.16.101.2
# display IP routing table.
[RTA] display IP routing-table
```

2. On RTB

```
<RTB> system-view
# configure a static default route using the IP address of the interface GE 0/0/1 on its neighbor RTC as the next-hop address.
[RTB] ip route-static 0.0.0.0 0.0.0.0 172.16.102.2
[RTB] display IP routing-table
```

3. On RTC

```
<RTC> system-view
# configure a static default route using the IP address of the interface GE 0/0/0 on its neighbor RTD as the next-hop address.
[RTC] ip route-static 0.0.0.0 0.0.0.0 172.16.103.1
[RTC] display IP routing-table
```

4. On RTD

```
<RTD> system-view
# delete the existed static route to the network 192.168.10.0/24.
[RTD] undo ip route-static 192.168.10.0 24
# configure a static default route using the IP address of the interface GE 0/0/0 on its neighbor RTC as the next-hop address.
[RTD] ip route-static 0.0.0.0 0.0.0.0 172.16.103.2
[RTD] display IP routing-table
```

Step 9: Verify the default route configurations.

Ping PC-30-1 from PC-10-1 command window and visa versa.

Ping PC-10-1 from loopback 0 on router RTD configuration window and visa versa.

Answer the following questions:

Q4-1.16. Paste the screenshot of the IP routing table on the router RTA.

Q4-1.17. Paste the screenshot of the IP routing table on the router RTB.

Q4-1.18. Paste the screenshot of the IP routing table on the router RTC.

Q4-1.19. Paste the screenshot of the IP routing table on the router RTD.

Q4-1.20. Can PC-10-1 and Loopback 0 on RTD ping each other? Please paste the screenshot of the ping result. If they can ping each other, please explain why.

COMMENTS

Your comments and/or suggestions on this lab: